Shadow Drum 42" Pendant P2042

Design modifications are always welcome.

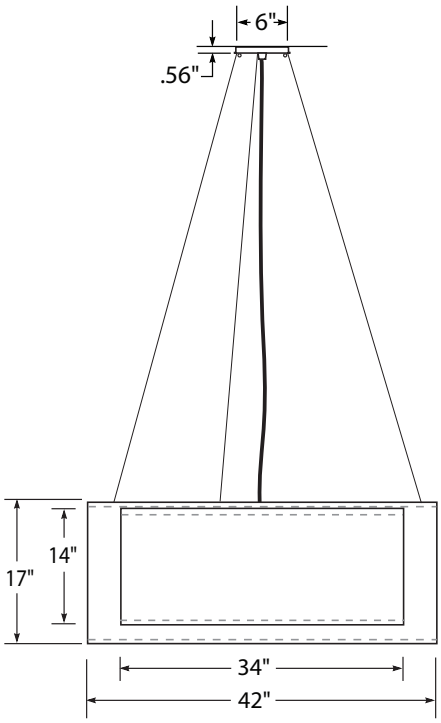

TOP VIEW

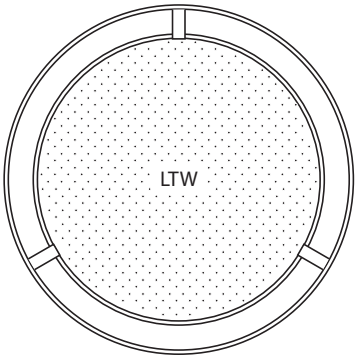

BOTTOM VIEW

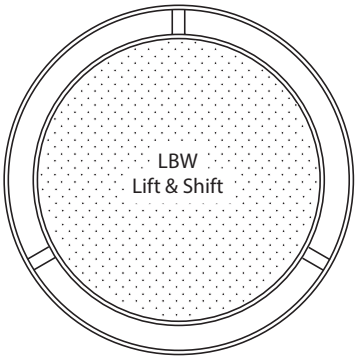

- Welded steel / aluminum
- Two washable diffusers
- LBW etched white acrylic inner bottom lens
- LTW white acrylic inner top lens
- 6' black or white cord
- Three suspension cables
- Canopy finished to match frame
- Mounts to standard J-box
- Suitable for damp locations

weight: 27 lbs

C UL US LISTED

MADE IN USA

P2042 – ____ – ____ – ____ – ____ – ____ – ____

CORD COLOR

- Black
- White

FINISH

F2 Chrome
F3 Black
F4 Earth
F5 Copper
F6 Brass
F7 Bronze
F8 Steel
F10 Hammered Copper
F11 White

DIFFUSER 1

*Trans***LUMENATE®** (outer shade) See web for options.

DIFFUSER 2

LUMENATE® (inner shade) See web for options.

LAMPING

L413 - LED 6420 Initial Lumens 63 W
3000K Dimming: 0-10V 1% UNV or 120V Phase

L414 - LED 9098 Delivered Lumens 126 W
3000K Dimming: 0-10V 1% UNV or 120V Phase

Please contact customer service for component specifications including additional color temperatures.

Lamps not included:
CFL 4/32W TBX-GX24Q-3
INC 3/Med. Base

CFL VOLTAGE

120V
277V
347V *CFL Only*

+ OPTIONS

SUSPENSION OPTIONS

STM - Field Cuttable Ball Swivel Stem with 1.78" deep canopy. *Specify length in 1' increments.*

CXX3 - Cord Extra (*Specify length*)
CXS3 - Cord Braided Silver *(not LED)*

CANOPY OPTIONS

CAC - Canopy Alternative Color
CF105 - Flair Canopy 10.5" Dia
CSF6 - Swivel Stem on CF6
CSF105 - Swivel Stem on CF105
CR860 - Cluster Canopy* 8" x 60"
C66 - Square Canopy 6"
C1010 - Square Canopy 10"

** Specify arrangement and heights.*

LENS OPTIONS

LTC4 - Top Lens Clear Acrylic
LTY4 - Top Lens Metal Perf.
LTO4 - Top Lens Opaque

LBY4 - Bottom Lens Metal Perf.
LBA4 - Applied LUMENATE® Bottom Lens

LED OPTIONS

EMR - Remote Emergency Battery Backup
Requires Stem or 2 Power Cords

CFL BALLAST OPTIONS

BDLI - Dimming Ballast Lutron Internal
BDAI - Dimming Ballast Advance Internal
BEI - Emergency Ballast Internal

Project Name

Specifier Name & Location

Quantity

Notes

Lumetta®

Lumetta Inc., 33 Minnesota Ave., Warwick, RI 02888 t 401-691-3994 f 401-921-1310 **www.lumetta.com**

This design is the intellectual property of Lumetta, Inc. All rights reserved. Specifications are subject to change without notice.